E+E

your partner
in sensor
technology.

Datasheet
EE360 UL Listed

High-End Moisture in Oil Sensor

C UL US
LISTED

Modbus

www.epluse.com

EE360

High-End Moisture in Oil Sensor

The UL listed EE360 is dedicated for reliable monitoring of lubrication, hydraulic and insulation oils as well as diesel fuel. In addition to highly accurate measurement of water activity (aw) and temperature (T), EE360 calculates the absolute water content (x) in ppm.

Measurement Performance

The EE360 employs high-end E+E humidity sensing elements manufactured in state-of-the-art thin film technology, which are the prerequisite for outstanding measurement accuracy.

Process Connection

The sensing probe can be employed up to 180 °C (356 °F), 20 bar (290 psi) and is available with either ISO or NPT slide fitting, which allows for variable immersion depth. Using the optional ball valve, the probe can be mounted or removed even without process interruption.

Enclosure

The EE360 features an UL Type 4 polycarbonate enclosure which facilitates installation and maintenance. The enclosure can accommodate a 100 - 240 V AC supply unit or various extension modules.

Outputs

The measured data is available on two analogue outputs or on the RS485 (Modbus RTU) interface and on the alarm (relay) outputs.

Configurable and Adjustable

The configuration and adjustment of the EE360 can be performed by using the free E+E PCS10 Product Configuration Software via the USB interface.

EE360 without ball valve set

EE360 with ball valve set

Features

Enclosure

- UL Type 4 protection rating
- Easy mounting and service
- Screws secured in cover

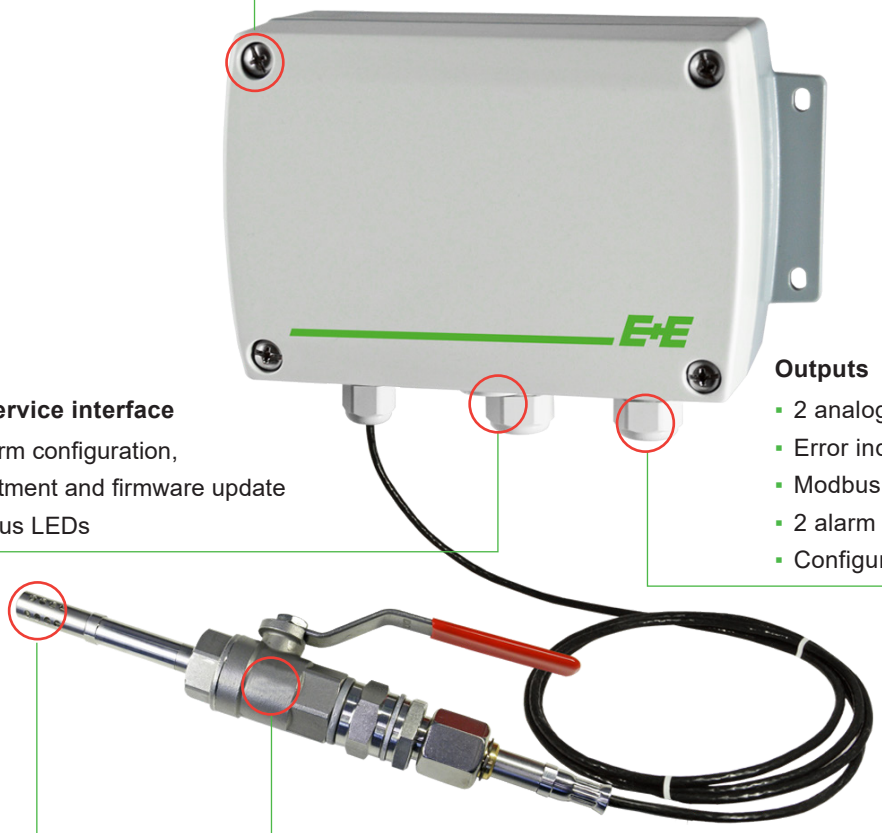

Outputs

- 2 analogue outputs current / voltage
- Error indication according NAMUR
- Modbus RTU / Modbus TCP
- 2 alarm outputs
- Configurable via software

USB service interface

- Perform configuration, adjustment and firmware update
- 4 status LEDs

Ball valve set

- Probe mounting and removal without process interruption

Probe

- Oil temperature -40...+180 °C (-40...+356 °F)
- Pressure tight up to 20 bar (290 psi)
- ISO or NPT process connection
- Pluggable probe option

Inspection certificate

According to DIN EN 10204-3.1

Measurement

Water Activity a_w / Water Content x

The moisture in oil can be expressed in absolute or relative terms.

Water activity a_w is the relative measure for moisture in oil. It represents the ratio between the actual amount of dissolved water and the maximum possible amount of dissolved water in the oil at a certain temperature. Independently of the oil type, the water activity shows how close to saturation is the oil at any moment in time.

- a_w = 0 indicates completely dry oil
- a_w = 1 indicates fully saturated oil

EE360 measures directly the water activity.

Water content x is an absolute measure equal to the amount of water in the oil. The water content is measured in ppm (parts per million) and is independent from the oil temperature. For assessing how far is the oil from saturation, x must be regarded together with T.

EE360 calculates x out of the measured a_w and T values. The calculation is oil dependent and requires a set of oil specific parameters.

Dimensions

Values in mm (inch)

Enclosure

Polycarbonate

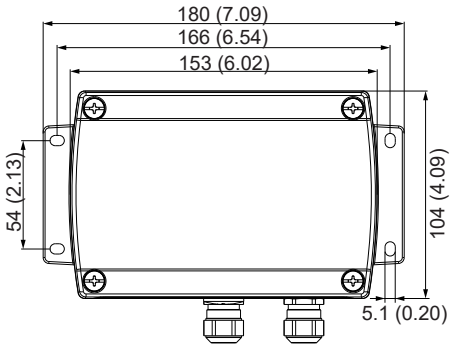

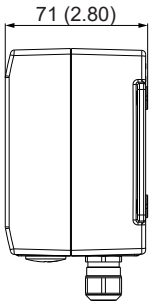

Conduit fitting[1)]

(Conduit tubing not included)

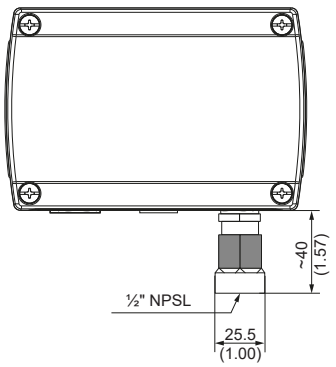

1) Conduit tubing not included

Liquid-tight 1/2" condiuit fitting[1)]

(for non-metallic Type B LT conduit)

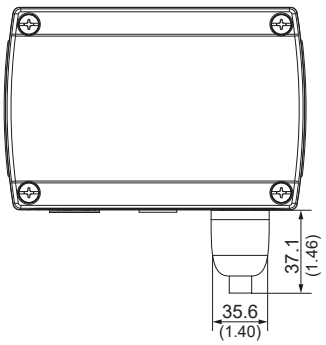

Dimensions

Values in mm (inch)

Probe

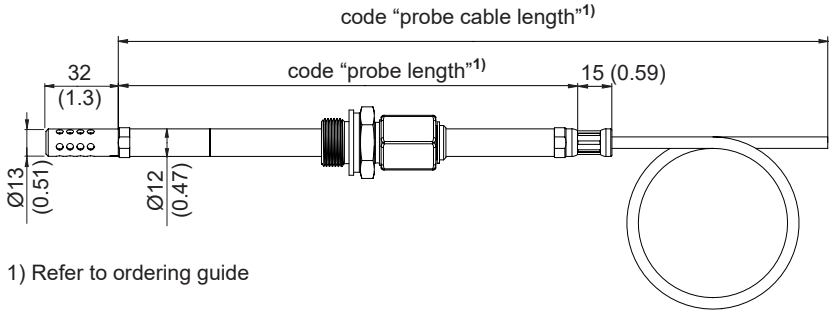

1) Refer to ordering guide

Probe

Minimum insertion depth

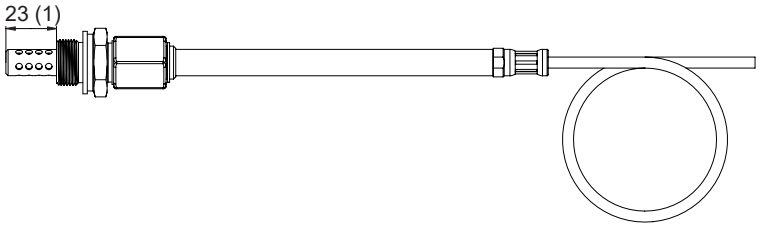

Probe

Maximum insertion depth

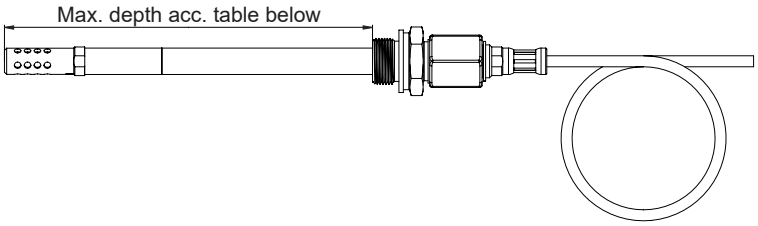

Probe length [mm (inch)]	Max. insertion depth [mm (inch)]
100 (2.5)	64 (3.9)
200 (6.5)	164 (7.9)
400 (14.3)	364 (15.8)
600 (22.2)	564 (23.6)
800 (30.1)	764 (31.59)
1000 (38.0)	964 (39.4)

Ball valve set G 1/2" ISO or NPT

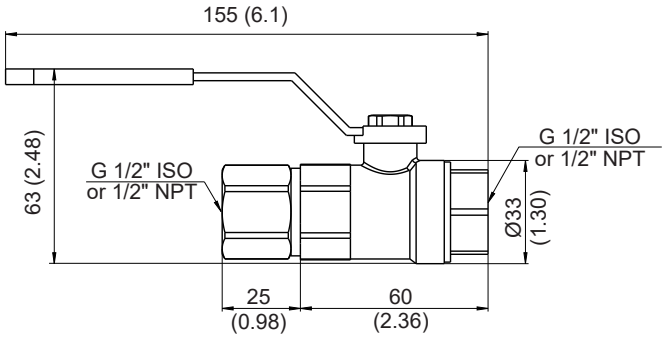

Technical Data

Measurands

Water Activity (a_w) / Water Content (x)

Measuring range	0...1 aw 0...100 000 ppm; actual range depends on the oil type, for non-mineral transformer oil, specific solubility parameters are needed (ppm output is valid in the range 0...100 °C (32...212 °F))
Accuracy[1)] **-15...+40 °C (5...+104 °F) (0...0.9 a_w)** **-15...+40 °C (5...+104 °F) (0.9...1 a_w)** **-25...+70 °C (-13...+158 °F)** **-40...+180 °C (-40...+356 °F)**	 ±(0.013 + 0.3%*mv) a_w mv = measured value ±0.023 a_w ±(0.014 + 1%*mv) a_w ±(0.015 + 1.5%*mv) a_w
Temperature dependency of electronics, typ.	±0.0001 a_w/°C (±5.6 * 10^{-5} a_w/°F)
Response time t_{90}, typ. @ 20 °C (68 °F) in still oil	10 min.

1) Including hysteresis, non-linearity and repeatability, traceable to intern. standards, administrated by NIST, PTB, BEV...
The accuracy statement includes the uncertainty of the factory calibration with an enhancement factor k=2 (2-times standard deviation).
The accuracy was calculated in accordance with EA-4/02 and with regard to GUM (Guide to the Expression of Uncertainty in Measurement).

Temperature (T)

Probe measuring range	-40...+180 °C (-40...+356 °F)
Accuracy[1)]	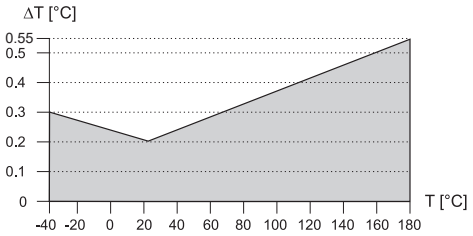
Temperature dependency of electronics, typ.	±0.005 °C/°C (±0.016 °F/°F)

1) Traceable to international standards, administrated by NIST, PTB, BEV,...
The accuracy statement includes the uncertainty of the factory calibration with an enhancement factor k=2 (2-times standard deviation).
The accuracy was calculated in accordance with EA-4/02 and with regard to GUM (Guide to the Expression of Uncertainty in Measurement).

Outputs

Analogue

Two analogue outputs freely selectable and scalable	0 - 1 / 5 / 10 V 4 - 20 mA 3-wire 0 - 20 mA 3-wire	-1 mA < I_L < 1 mA R_L < 500 Ohm R_L < 500 Ohm	I_L = load current R_L= load resistance

Digital

Digital interface	RS485 (EE360 = 1 unit load)
Protocol **Factory settings** **Supported Baud rates** **Measured data types**	Modbus RTU 9 600 Baud, parity even, 1 stop bit, Modbus address 231 300, 600, 1200, 2400, 4800, 9600, 19200, 38400, 57600 and 76800 FLOAT32 and INT16

Technical Data

General

Power supply	**Input voltage range**	**Power requirments**	**Conductor temperature rating**
	8 - 35 V DC (LPS)	max. 2 W*)	min. 75 °C (167 °F)
	Indoor use: 12 - 30 V AC, 50/60 Hz (Class 2 supply) 100 - 240 V AC, 50/60 Hz with option AM3, AM5[1)]	max. 4 VA*) max. 5 VA**)	
	Outdoor use: 12 - 16 V AC, 50/60 Hz (Class 2 supply) 100 - 240 V AC, 50/60 Hz with option AM5[1)]	max. 4 VA*) max. 5 VA**)	
	*) Including 2 voltage or current outputs and relay option AM2 or AM6 **) Including 2 voltage or current outputs		
Electrical connection	Screw terminals max. 1.5 mm^2 (AWG 16)		
Cable glands **for polycarbonate enclosure** **for metal enclosure**	 M16x1.5, for cable Ø3 - 7 mm (0.12 - 0.28") M16x1.5, for cable Ø4.5 - 10 mm (0.18 - 0.39")		
Pressure working range with pressure-tight probe	0.01...20 bar (0.15...300 psi)		
Temperature workintg range **Electronics** **Remote sensing probe cable**	 -40...+60 °C (-40...+140 °F) -40...+150 °C (-40...+302 °F)		
Material **Probe** **Enclosure**	Stainless steel 1.4404 (AISI 316L) PC (Polycarbonate), UL94-V0 approved		
Protection rating	UL Type 4[2)], IP65[3)]		
Electromagnetic compatibility	EN 61326-1 FCC Part15 Class A	EN 61326-2-3 ICES-003 Class A	Industrial environment
Compliance	c UL us LISTED **United States:** UL Listed, CCN QUYX, Under UL 61010-1, Process Control Equipment; FCC Compliant to CFR47, Part 15, Subpart B, Class A **Canada:** UL Listed, CCN QUYX7, Under CSA C22.2 No. 61010-1, Signal Equipment; Industry Canada Compliant, ICES-003		
Configuration software	E+E PCS10 Product Configuration Software Free download from www.epluse.com/configurator		
Two alarm outputs[1)] AM2, AM6 indoor use AM6 outdoor use	Changeover contact 250 V AC / 6 A, conductor temperature rating min. 90 °C (194 °F) 28 V DC / 6 A, conductor temperature rating min. 90 °C (194 °F)		

1) Degree of pollution 2, overvoltage category II, altitude up to 3000 m (9843 ft).
2) Valid only with liquid-tight 1/2" conduit fitting and cable glands. Not valid with M12 plug (E4, E5, E6, E12), conduit fitting E23, option AM2 and AM3.
3) IP65 not evaluated by UL.

Ordering Guide

	Feature	Description	Code
Hardware Configuration			EE360-AP1
	Probe Cable Length	2 m (6.6 ft)	No code
		5 m (16.4 ft)	K5
		10 m (32.8 ft)	K10
	Probe length	100 mm (3.94")	L100
		200 mm (7.87")	No code
		400 mm (15.75")	L400
		600 mm (23.62")	L600
		800 mm (31.50")	L800
		1000 mm (39.37")	L1000
	Process connection	G 1/2" ISO - slide fitting, Ø13 mm (0.51")	No code
		1/2" NPT - slide fitting, Ø13 mm (0.51")	PA25
	Electrical connection	Cable glands	No code
		1 x plug for power supply and outputs[1)]	E4
		1 x cable gland and 1 plug for Modbus RTU (requires option J3)[1)]	E5
		2 x plugs for power supply + outputs and Modbus RTU (requires option J3)[1)]	E6
		3 x plugs for power supply + outputs and Modbus RTU (requires option J3)[1)]	E12
		Conduit fitting [2)]	E23
		Liquid-tight 1/2" conduit fitting	E24
	Optional features	RS485 module - Modbus RTU	J3
		Alarm outputs (Relay module with cable glands)[3)]	AM2
		Integrated power supply (100 - 240 V AC, 50/60 Hz), with connector[3) 4)]	AM3
		Integrated power supply (100 - 240 V AC, 50/60 Hz), with liquid-tight 1/2" conduit fitting[3)]	AM5
		Alarm outputs with liquid-tight 1/2" conduit fitting[3)]	AM6
Setup (Analogue) Outputs	Output 1 measurand	Water activity a_w [ ]	No code
		Water content x [ppm]	MA70
		Temperature T [°C]	MA1
		Temperature T [°F]	MA2
	Output signal 1[5)]	0 - 1 V	GA1
		0 - 5 V	GA2
		0 - 10 V	GA3
		0 - 20 mA	GA5
		4 - 20 mA	GA6
	Output 1 scaling low	0	No code
		Value	SAL*Value*
	Output 1 scaling high	1	No code
		Value	SAH*Value*
	Output 2 measurand	Temperature T [°C]	No code
		Temperature T [°F]	MB2
		Water activity a_w [ ]	MB67
		Water content x [ppm]	MB70
	Output signal 2[5)]	0 - 1 V	GB1
		0 - 5 V	GB2
		0 - 10 V	GB3
		0 - 20 mA	GB5
		4 - 20 mA	GB6
	Output 2 scaling low	Value	SBL*Value*
	Output 2 scaling high	Value	SBH*Value*
	Oil parameterization for water content calculation	Mineral transformer oil	No code
		Customer specific oil	PPMxxx[6)]

1) For indoor use only. Mating plug included in the scope of supply.
2) For indoor use in dry location only.
3) Combination of alarm output (AM2/AM6), and integrated power supply (AM3 / AM5) is not possible. NFPA = National Fire Protection Association.
4) Integrated power supply; (AM3) includes 2 plugs for power supply and outputs, other plug options are not possible.
5) Both analogue outputs shall be either voltage or current.
6) Procedure for customer specific oil (see table below).

Ordering Guide

6) Procedure for customer specific oil

Option	Description	Code
Oil number is known	Replace the xxx by the corresponding number	
Obtaining new oil parameters via oil analysis	Contact and provide E+E HQ the datasheet of the oil before sending us 2 litres of oil. After determination of the oil specific parameters, the corresponding oil number is available, insert this in place of the xxx.	Oil-ppmcal
Obtaining new oil parameters via saturation curve	Contact and provide E+E HQ the datasheet of the oil together with the saturation curve. After calculation of the oil specific parameters, the corresponding oil number is available, insert this in place of the xxx.	Oil-calc

Order Example

EE360-AP1J3GA3GB3SBL-40SBH180

Feature	Code	Description
Approval	AP1	UL listed cULus QUYX.E500367
Probe cable length	No code	2 m (6.6 ft)
Probe length	No code	200 mm (7.87")
Process connection	No code	G 1/2" ISO - slide fitting, Ø13 mm (0.51”)
Electrical connection	No code	Cable glands
Optional features	J3	RS485 module - Modbus RTU
Output 1 measurand	No code	Water activity a_w [ ]
Output 1 signal	GA3	0 - 10 V
Output 1 scaling low	No code	0
Output 1 scaling high	No code	1
Output 2 measurand	No code	Temperature T [°C]
Output 2 signal	GB3	0 - 10 V
Output 2 scaling low	SBL-40	-40
Output 2 scaling high	SBH180	180

Oil-ppmcal

Contact and provide E+E HQ the datasheet of the oil before sending us 2 litres of oil.

Accessories

For further information see datasheet Accessories.

Description	Code
Bracket for installation onto mounting rails[1)]	HA010203
Ball valve set G 1/2" ISO	HA050101
Ball valve set 1/2" NPT	HA050104

1) For polycarbonate enclosure only. Two pieces are necessary for each EE360.

Company Headquarters &
Production Site

E+E Elektronik Ges.m.b.H.
Langwiesen 7
4209 Engerwitzdorf | Austria
T +43 7235 605-0
F +43 7235 605-8
info@epluse.com
www.epluse.com

Subsidiaries

E+E Sensor Technology (Shanghai) Co., Ltd.
T +86 21 6117 6129
info@epluse.cn

E+E Elektronik France SARL
T +33 4 74 72 35 82
info.fr@epluse.com

E+E Elektronik Deutschland GmbH
T +49 6171 69411-0
info.de@epluse.com

E+E Elektronik India Private Limited
T +91 990 440 5400
info.in@epluse.com

E+E Elektronik Italia S.R.L.
T +39 02 2707 86 36
info.it@epluse.com

E+E Elektronik Korea Ltd.
T +82 31 732 6050
info.kr@epluse.com

E+E Elektronik Corporation
T +1 847 490 0520
info.us@epluse.com

E+E

your partner
in sensor
technology.

Version v1.2 | 09-2023

www.epluse.com